CATALANO USA
THE ESSENCE OF CERAMICS

PREMIUM UP 120 WASHBASIN
112VPUP

PREMIUM

FEATURES

- Single washbasin made of pressure-cast fireclay.
- Cata-glaze, lifetime treatment. A total bacteria-proof barrier.
- Install wall-hung, sit-on or on base cabinet.
- 0 up to 3 faucet holes. Must specify number of holes and hole position.
- ADA compliant when installed to the specific requirements of these regulations.

OPTIONS

- 5P12VP Front Towel Rail constructed of brass with chrome finish. L45 9/32"

SIZE: W47 1/4" x D18 1/2" x H6 19/64"

SHIP WEIGHT: 77.2 lbs.

To Be Specified:

Model No.

❒	112VPUP00	White

Faucet Holes

❒	0
❒	1
❒	2
❒	3

Circle location of faucet hole(s) drilling below

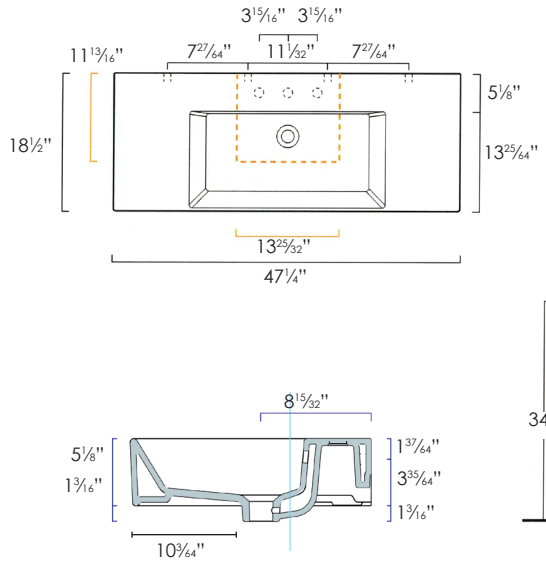

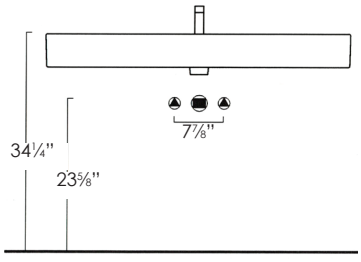

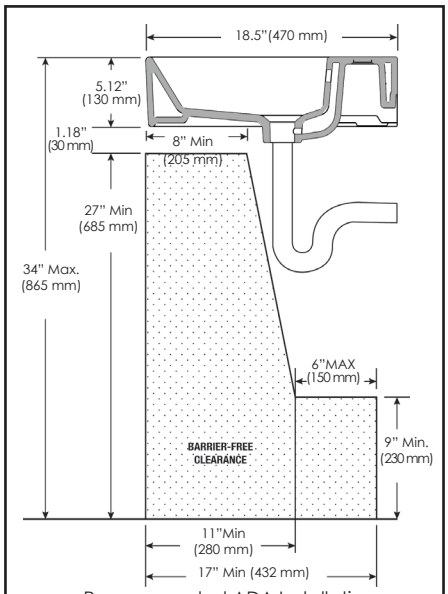

Recommended ADA Installation

Compliance Certification - Meets or Exceeds the Following Specifications:

Meets the Americans with Disabilities Act Guidelines and ANSI A117.1 - Accessible and Usable Buildings and Facilities - Check Local Codes. Top of front rim mounted 864mm (34") from finished floor.